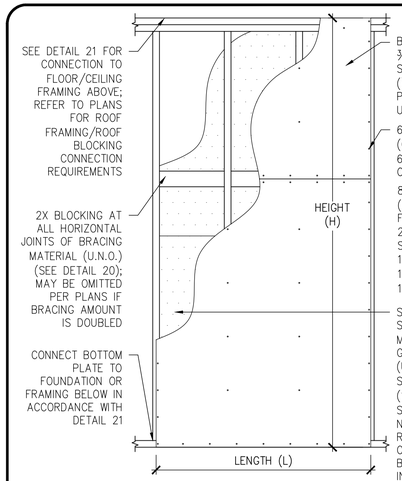


## METHOD WSP — 1

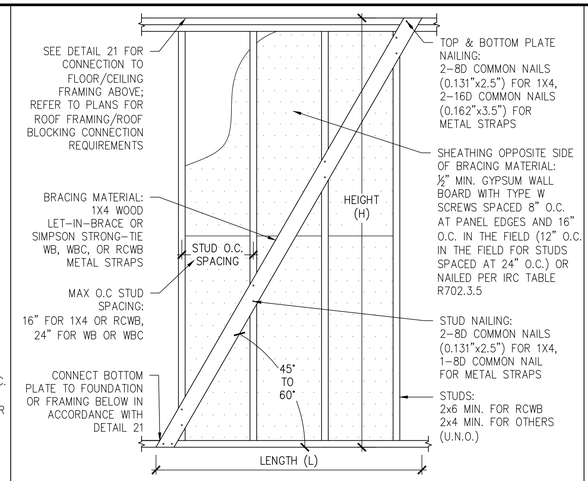


## METHOD LIB — 2

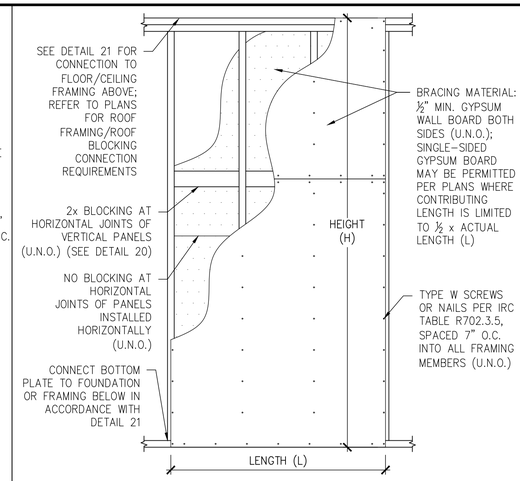


## METHOD GB — 3

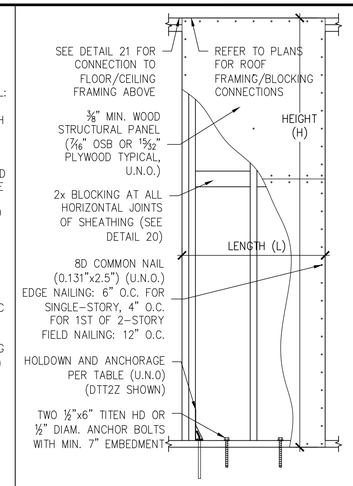


| METHOD ABW HOLDOWN FORCES | | | | | |
|---|---|---|---|---|---|
| SUPPORTING STORY | HEIGHT OF BRACED WALL PANEL (H) | | | | |
| | 8 FEET | 9 FEET | 10 FEET | 11 FEET | 12 FEET |
| ONE-STORY | 1,800 LBS | 1,800 LBS | 1,800 LBS | 2,000 LBS | 2,200 LBS |
| FIRST OF TWO-STORIES | 3,000 LBS | 3,000 LBS | 3,000 LBS | 3,300 LBS | 3,600 LBS |

| HOLDOWN FORCE (LBS) | HOLDOWN | ANCHOR BOLT DIAM. (IN.) | ANCHOR | EMBED (IN.) | MIN. END DISTANCE (IN.) | MIN. STEM HEIGHT (IN.) |
|---|---|---|---|---|---|---|
| 2X4 WALLS (1¾" EDGE DISTANCE) | | | | | | |
| 1800 2000 | DTT2Z DTT2Z-SDS2.5 | ½ | SET-3G | 4.5 | 7 | 11 |
| | | | AT-XP | 8 | 11.5 | 9.5 |
| 2200 | HTT4 | ⅝ | SET-3G | 4.5 | 7 | 12 |
| | | | AT-XP | 9.5 | 14.5 | 11 |
| | | | TITEN HD | 5.5 | 6.5 | 8.5 |
| 3000 | HTT4 | ⅝ | SET-3G | 11.5 | 17.5 | 27.5 |
| 3300 | HTT5-3/4 | ¾ | SET-3G | 13.5 | 20.5 | 32.5 |
| 3600 | HDU8 | ⅞ | SET-3G | 16 | 23.5 | 38 |
| 2X6 WALLS (2¾" EDGE DISTANCE) | | | | | | |
| 1800 2000 | DTT2Z DTT2Z-SDS2.5 | ½ | SET-3G | 4 | 6 | 9.5 |
| | | | AT-XP | 7.5 | 11 | 9 |
| | | | TITEN HD | 4 | 4.5 | 6.5 |
| 2200 | HTT4 | ⅝ | SET-3G | 4 | 6.5 | 9.5 |
| | | | AT-XP | 5 | 7.5 | 12 |
| | | | TITEN HD | 5 | 5.5 | 8 |
| 3000 | HTT4 | ⅝ | SET-3G | 11 | 16.5 | 26.5 |
| 3300 | HTT5-3/4 | ¾ | SET-3G | 13 | 19.5 | 31.5 |
| 3600 | HDU8 | ⅞ | SET-3G | 15 | 22.5 | 36 |

1. MIN. CONCRETE COMPRESSIVE STRENGTH IS 3000 PSI FOR HOLDOWN FORCES LESS THAN 3000 LBS., AND 3500 PSI FOR HOLDOWN FORCES 3000 LBS. AND HIGHER, EXCEPT AS FOLLOWS: ½" DIAMETER TITEN HD REQUIRES A MIN. CONCRETE COMPRESSIVE STRENGTH OF 3500 PSI FOR THE 2000-LB HOLDOWN FORCE.

## METHOD ABW — 4

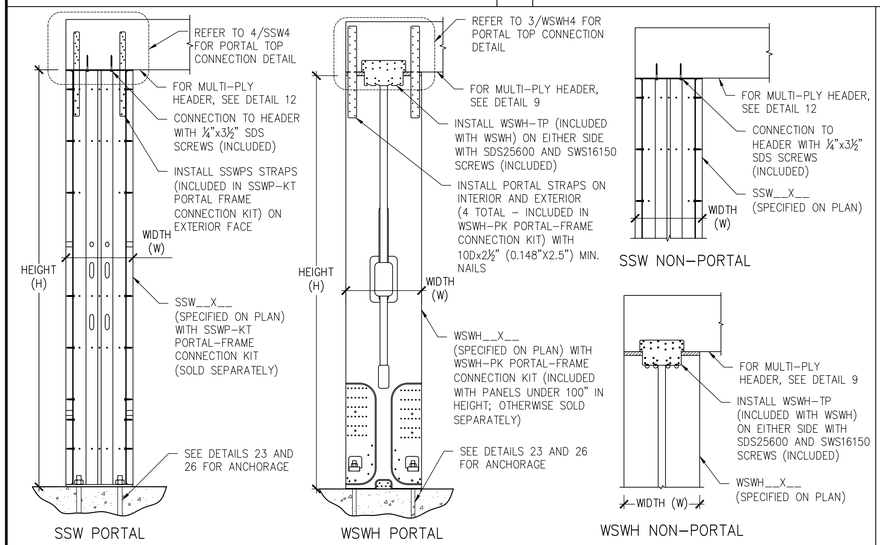


## STRONG-WALL GARAGE-FRONT — 5

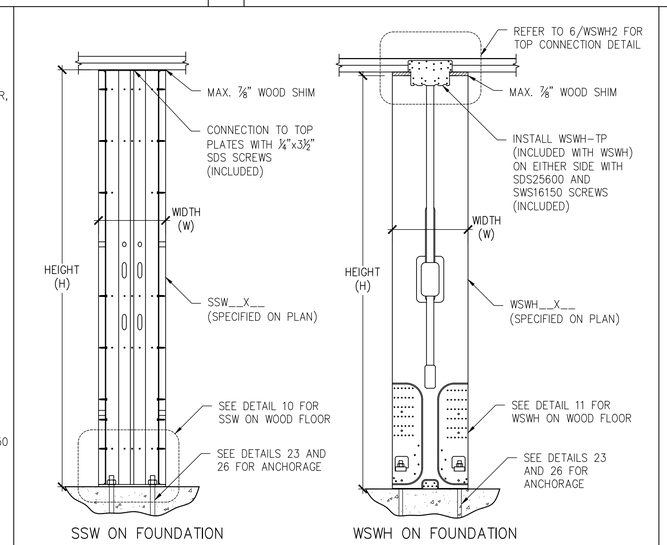


## STRONG-WALL FIRST-STORY — 6

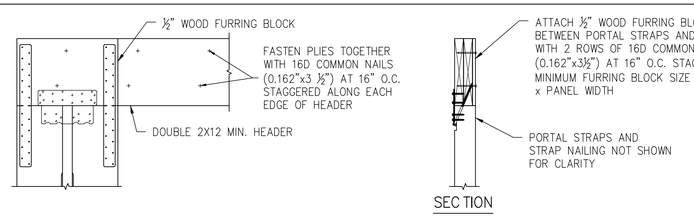


## WSWH WITH MULTI-PLY HEADER — 9

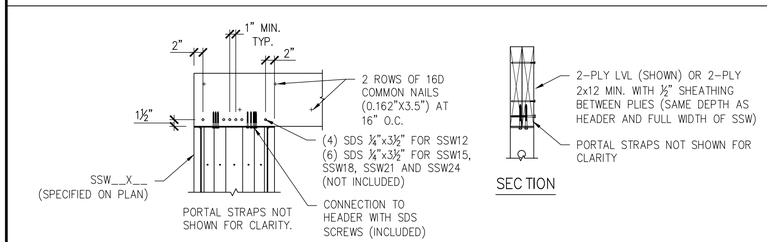


## SSW WITH MULTI-PLY HEADER — 12

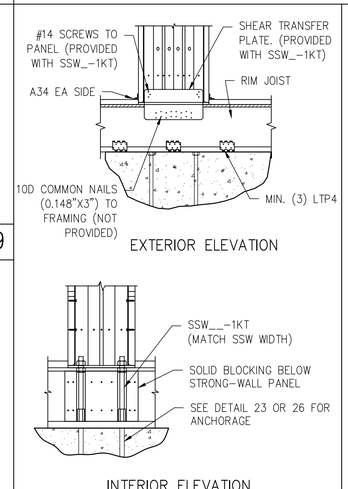


## SSW ON WOOD FLOOR — 10

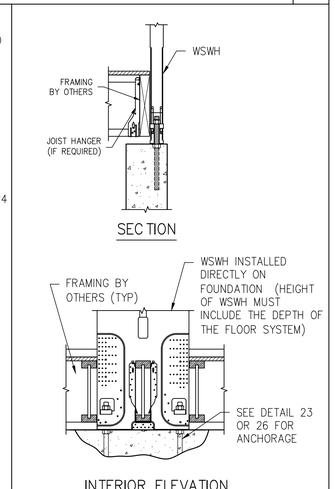


## WSWH ON WOOD FLOOR — 11

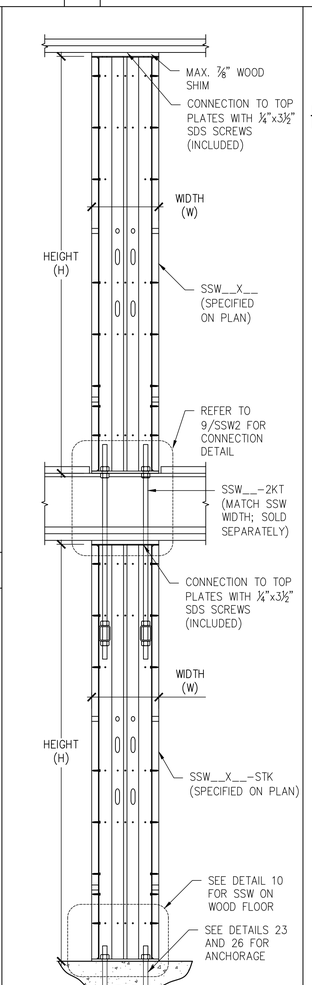


## SSW STACKED — 7

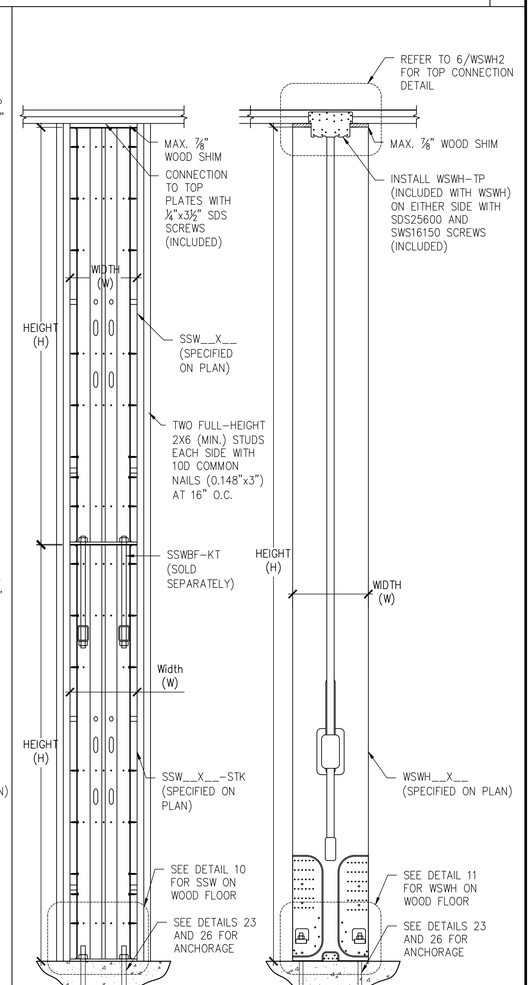


## STRONG-WALL BALLOON-FRAMING — 8

| NO. | DATE | REVISIONS |
|---|---|---|
| | | |


SIMPSON Strong-Tie, Co. Inc.
• 5956 W. Las Positas Blvd. Pleasanton, CA 94588
• Tel: (800) 999-5099
• Website: www.strongtie.com


SIMPSON Strong-Tie — THERE IS NO EQUAL

# WALL BRACING - WIND

BRACING DETAILS FOR WIND AND SDC A&B
2018 IRC WOOD WALL CONSTRUCTION
GENERAL DETAILS FOR STEMWALLS

SIMPSON Strong-Tie — THERE IS NO EQUAL

NAME
DATE 3-12-2021
SCALE N.T.S.
CHECKED
SHEET WBW1
1 OF 3 SHEETS
JOB NO.